Ridge Vents

20’ Rigid Roll® | 4’ Rigid Section™

The amount of ventilation is controlled by the length of slot cut along the roof ridge. For the most attractive roofline, it is recommended that Quarrix Rigid Roll® or Rigid Section™ Ridge Vents be installed along the entire ridge of the roof.

1. Ridge Ventilation Slot Preparation

The slot may be pre-cut on a new roof before or after shingle installation or in a retrofit, the slot can be cut from the pre-shingled roof using a circular saw with a carbide tip blade (protective eye goggles should be worn during this process). For Quarrix Ridge Vents with ⅝” profile, cut a 2” slot (1” on each side of ridge) along the ridge(s). For a roof with a center beam, a 3½” slot should be cut (1¾” on each side of ridge). For Quarrix Ridge Vents with 1” profile, cut a 2½” slot (1¼” on each side ridge). For center beam applications a 4” slot should be cut (2” on each side of ridge). A minimum of 6” must be left uncut on each end of the ridge. Once the slot is cut and any overlapping shingles covering the ridge are trimmed and removed, the ridge is ready for vent installation.

Español

1. Preparación de la ranura para el respiradero de cumbrera

La ranura puede cortarse en un techo nuevo antes o después de la instalatión de las tejas o en una remodelación. La ranura puede cortarse usando una sierra circular electrica (Se debe usar lentes protectores durante este proceso). Para los respiradores de bajo perfil de Quarrix, corte una ranura de 2 pulgadas (1 pulgada de cada lado de la cumbrera). Para un techo de viga central, se puede cortar una ranura de 3½ pulgada (1¾ pulgada de cada lado de la cumbrera). Para los respiraderos de alto perfil de Quarrix, corte una ranura de 2½ pulgada (1¼ pulgada a cada lado de la cumbrera). Para un techo de viga central se debe cortar una ranura de 4 pulgadas (2 pulgadas en cada lado de la cumbrera). Se debe dejar un minimo de 6 pulgadas sin cortar en cada extremo de la cumbrera. Una vez que se ha cortado la ranura y se han superpuesto las tejas que cubren la cumbrera, ésta estará lista para la instalación del respiradero.

Français

1. Préparation de la fente de ventilation de l’arête

La fente peut être pré-coupée sur un nouveau toit avant ou après l’installation du bardeau ou lors d’une installation rétroactive, la fente peut être coupée du toit pré-imbriqué au moyen d’une scie circulaire avec une lame à pointe au carbure. (Des lunettes protectrices doivent être portées durant ce processus.) Pour les évents de faîtage Quarrix à profil de 1,6 cm, coupez une fente de 5 cm (2,5 cm de chaque côté de l’arête) le long de l’arête (les arêtes). Pour les toits avec une poutre centrale, une fente de 9 cm doit être coupée (4,5 cm de chaque côté de l’arête). Pour les évents de faîtage Quarrix avec un profile de 2,5 cm, coupez une fente de 6,4 cm (3,2 cm de chaque côté de l’arête). Pour les applications avec une poutre centrale, une fente de 10,2 cm doit être coupée (5,1 cm de chaque côté de l’arête). Une distance minimale de 15 cm ne doit pas être coupée à chaque extrémité de l’arête. Une fois la fente coupée et tous les bardeaux se chevauchant couvrant l’arête émargés et enlevés, l’arête est prête à l’installation de l’évent.consequat.

2. End Cap Installation

Pull apart a pre-cut section of the foam end cap found with the vent. Using a utility knife, make a cut in the StormStop® material ½” on each side, back from the end of the section. Using construction adhesive or sealant caulk, coat both sides of the StormStop material where it has been cut back at the end of the vent. Insert the foam end cap with the cut-back StormStop material between the foam end cap and the underside of the vent to assure a weather-tight seal. Sealant must be applied to roof shingles before installing vent. See Step 3 for approved sealants.

INST-RR01-9.12.17

Español

2. Instalación de los tapones ciegos Separe una sección de los tapones ciegos de esponja cortada previamente que viene en el respiradero. Con una navaja haga un corte de ½ pulgada en la membrana StormStop a cada lado, desde la parte trasera del extremo de la sección. Con un adhesivo o pegamento para construcción, pegar ambos lados de la membrana StormStop donde se cortó. Coloque el tapón ciego de esponja en la membrana StormStop en la parte inferior del respiradero y asegurese que esté correctamente sellado. Ver paso # 3 para sellado apropiado.

Français

2. Installation du capuchon d'extrémité Séparez une section prédécoupée du capuchon d'extrémité en mousse se trouvant dans l'évent. Au moyen d'un couteau universel, effectuez une coupe dans le matériau StormStop® de 1,3 cm de chaque côté, à l'arrière de l'extrémité de la section. Au moyen d'un adhésif de construction ou d'un produit de scellement, enduisez les deux côtés du matériau StormStop à l'endroit où il a été coupé à l'extrémité de l'évent. Insérez le capuchon d'extrémité en mousse avec le matériau StormStop coupé entre le capuchon d'extrémité en mousse et la partie inférieure de l'évent pour assurer une étanchéité imperméable. Le produit de scellement doit être appliqué aux bardeaux de toit avant d'installer l'évent. Reportez-vous à l'étape 3 pour connaître les produits de scellement approuvés.

3. Vent Placement on Ridge

Attach vent to the roof deck by driving a nail in each of the two corners on both ends of the vent. Also, drive two nails through the vent and foam end cap to hold foam in place on the ends of the ridge only. Nails should penetrate the wood roof deck at least ¾". It is not recommended to nail vent to ridge prior to cap shingle installation.

Because of the popularity of dimensional roofing material such as the newer 40/50 year and lifetime laminated shingles, we require that a bead of sealant be applied to the roof shingles before installing the vent on the ridge. This sealant should fill any voids between the bottom of the vent and the surface of the shingle. Use either butyl sealant conforming to ASTM C1085, latex sealant conforming to ASTM C834, silicone sealant complying with ASTM C920 or asphalt roofing cement complying with ASTM D4586. Roll out or place Quarrix Ridge Vent along the entire length of slot also covering the 6" minimum uncut ridge on both ends. Bend vent into a "V" Shape. Secure at the lead edge after inserting the end cap. Nail should penetrate roof deck a minimum of ¾". Pull the vent tight and secure at about 10'. Pull the rest of the vent tight and secure, inserting the end cap. Multiple lengths of vent can be joined by butting the sections tightly together. End caps should be inserted at the beginning and end of each section. Do not pre-fasten ridge vent along the entire vent; with Quarrix Ridge Vent's One-Pass™ Installation, it is not necessary to pre-fasten the vent every 2' to 3' prior to cap shingle installation.

Español

3. Aplicación del respiradero en la cumbrera

Colocar el respiradero en la cumbrera del techo y clavar dos clavos en cada esquina del respiradero. Tambien clavar dos clavos cerca de los tapones ciegos de esponja. Los clavos deben penetrar en el techo de madera por los menos 3⁄4 de pulgada. No se recomienda clavar el respiradero en la cumbrera antes que las tejas. Debido a la cantidad de materiales para techar en las nuevas tejas laminadas de 40/50 años de duracion requerimos que se aplique un sellador en las tejas antes de instalar el respiradero en la cumbrera. Este sellador debe llenar cualquier vacio entre la parte inferior del respiradero y la superficie de la teja. Use un sellador de butilo que cumpla con las especificaciones ASTM C1085, un sellador de latex que cumpla con las especificaciones ASTM C834, un sellador de silicona que cumpla con las especificaciones ASTM C920 o un cemento para techar de asfalto que cumpla con las especificaciones ASTM D4586. Aplique el respiradero Quarrix a lo largo de toda la longitud de la ranura incluyendo las 6 pulgadas que no fueron cortadas en ambos extremos. Doble ligeramente en respiradero en forma de "V". Asegure los extremos colocando un tapon ciego de esponja. Los clavos deben penetrar el techo un minimo de ¾ pulgada. Extienda el respiradero y asegurelo aproximadamente a 10 pies colocando un tapon ciego de esponja en cada extremo. Multiples porciones de respiradero pueden juntarse empalmando las secciones bien apretadas. Los tapones ciegos de esponjas deben colocarse al principio y al final de cada sección. Con Quarrix One-Pass Installation no se recomienda pre clavar el respiradero cada 2 o 3 pies, no es necesario antes de instalar las tejas.

Français

3. Placement de l'évent sur l'arête

Fixez l'évent au platelage en enfonçant un clou dans chacun des deux coins aux deux extrémités de l'évent. Enfoncez aussi deux clous à travers l'évent et le capuchon d'extrémité en mousse pour tenir la mousse en place sur les extrémités de l'arête seulement. Les clous doivent pénétrer le platelage en bois d'au moins 1,9 cm. Il n'est pas recommandé de clouer l'évent sur l'arête avant d'installer le bardeau du capuchon. À cause de la popularité du matériau de couverture dimensionnel comme les bardeaux laminés avec garantie de 40/50 ans et à vie, nous exigeons qu'un boudin de produit de scellement soit appliqué aux bardeaux de toit avant d'installer l'évent sur l'arête. Le produit de scellement soit appliqué aux bardeaux de toit avant d'installer l'évent sur l'arête. Le produit de scellement doit remplir tous les vides entre la partie inférieure de l'évent et la surface du bardeau. Utilisez soit un produit de scellement en caoutchouc de butyle conforme à ASTM C1085, un produit de scellement au latex conforme à ASTM C834, un produit de scellement à base de silicone conforme à ASTM C920 ou un ciment de couverture bitumé conforme à ASTM D4586.

Français

3. Placement de l'évent sur l'arête (Continued)

Déroulez ou placez l'évent de faîtage Quarrix sur toute la longueur de la fente tout en couvrant le minimum de 15 cm d'arête non coupée aux deux extrémités. Pliez l'évent en forme de « V ». Fixez le rebord antérieur après avoir inséré le capuchon d'extrémité. Le clou doit pénétrer le platelage d'au moins 1,9 cm. Tirez l'évent fermement et fixez-le à une distance d'environ 3 mètres. Tirez le reste de l'évent fermement et fixez en insérant le capuchon d'extrémité. Plusieurs longueurs d'évent peuvent être reliées en emboutant les sections fermement ensemble. Insérez un capuchon d'extrémité au début et à la fin de chaque rouleau. Ne fixez pas préalablement l'évent de faîtage sur toute la longueur de l'évent; avec l'installation One-Pass™ de l'évent de faîtage Quarrix, il n'est pas nécessaire de préalablement fixer l'évent tous les 60 à 90 cm avant l'installation du bardeau du capuchon.

3b. Note: For "Class A" Installation Only

For "Class A" Quarrix Ridge Vent installation, follow steps 1, 2, 3 as stated above. Once the vent has been installed, use a utility knife with a hook blade and remove the corrugated plastic center section of the vent. Do this for the hip and ridge. This modified installation meets the requirements for UL790 "Class A"; standard installation meets the requirements for UL790 "Class C." Continue to Step 4.

Español

3b. Solamente para la instalación de la "Clase A"

Para la instalación del respiradero Quarrix de "Clase A" siga los pasos 1, 2 y 3 como se detalla anteriormente. Una vez que el respiradero haya sido instalado, con una navaja de gancho corte y remueva la sección central del plástico del respiradero desde el principio hasta el final. Haga esto en toda la cumbrera. Esta instalación modificada cumple con los requisitos para la "Clase A" UL790, y cumple con los requisitos de instalación estadar para la "Clase C" UL790. Continue con el paso # 4.

Français

3b. Pour les installations de « catégorie A » seulement

Pour l'installation d'évent de faîtage Quarrix de « catégorie A », suivez les étapes 1, 2, 3 indiquées ci-dessus. Une fois l'évent installé, utilisez un couteau universel avec une lame à crochet et retirez la section centrale en plastique ondulé de l'évent. Faites de même pour la croupe et l'arête. Cette installation modifiée se conforme aux exigences UL790 de « catégorie A »; l'installation standard se conforme aux exigences UL790 de « catégorie C ». Passez à l'étape 4.

4. Cap Shingle Installation

Using One-Pass Installation secure cap shingles and vent at the same time. Nail ridge caps with roofing nails in a common, overlapping pattern. Nails should penetrate the wood roof deck at least ¾". For the fastest installation, a coil nail gun can be used as long as the minimum penetration is ¾". It is important when installing this vent that you maintain the pitch of the roof. The vent has been installed properly if the bottom of the vent is flat on the roof and the peak is slightly rounded.

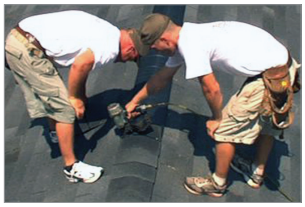

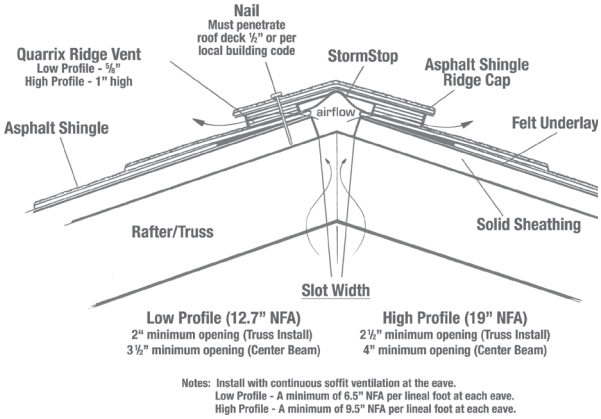

Español

4. Instalación de las tejas

Con One-Pass Installation asegure las tejas y el respiradero al mismo tiempo. Clave las tejas en el respiradero con clavos para construcción en un estilo de superposición. Los clavos deben introducirse al menos ¾ de pulgada en el techo de madera. Para una instalación mas rápida se puede usar un pistola de clavos siempre y cuando tenga una penetración de ¾ de pulgada. Cuando se instala el respiradero es muy importante mantener la inclinación del techo. El respiradero ha sido instalado correctamente si la parte inferior de éste se ve plana en el techo y el medio del respiradero está ligeramente redondeado.

Français

4. Installation du bardeau du capuchon

Au moyen de l'installation One-Pass, fixez les bardeaux du capuchon et l'évent en même temps. Clouez les capuchons d'arête avec des clous de toiture dans un motif de recouvrement commun. Les clous doivent pénétrer le platelage en bois d'au moins 1,9 cm. Pour l'installation la plus rapide, vous pouvez utiliser un pistolet goujonneur à spire tant que la pénétration minimale est de 1,3 cm. Il est important lors de l'installation de cet évent de maintenir la pente du toit. L'évent est correctement installé si sa partie inférieure repose à plat sur le toit et que le sommet est légèrement arrondi.

Hip Roofs

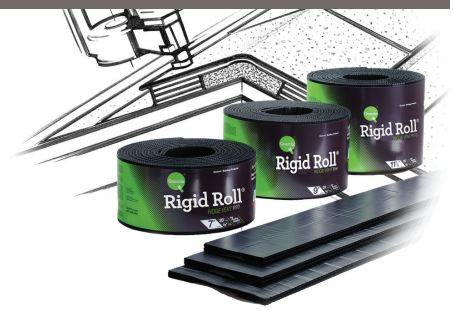

1. Hip and Ridge Ventilation Slot Preparation

Determine how long of a hip and ridge ventilation slot will be required according to 1:300 rule. The ridge and hip ventilation slot may be pre-cut on a new roof before or after shingle installation or in a retrofit, the slot can be cut from the pre-shingled roof using a circular saw with a carbide tip blade (protective eye goggles should be worn during this process). Start ridge ventilation slot 6” from point where hip and ridge meet. For ⅝” profile vents, cut a 2” slot (1” on each side of ridge) along the ridge(s). For a roof with a center beam, a 3½” slot should be cut (1¾” on each side of ridge). For 1” profile vents, cut a 2½” slot (1¼” on each side of ridge). For center beam applications a 4” slot should be cut (2” on each side of ridge). If entire ridge requires ventilation, stop ventilation slot 6” from point where hip and ridge meet. To maintain structural integrity, one continuous slot is not recommended on hip applications. Start ventilation preparation by leaving 6” of hip uncut from where the ridge and hip meet. Cut a 3½” wide slot for ventilation. Hip slot should be 18” in length, spaced with a 12” uncut area between each 18” opening. The slot for ventilation should not be cut any lower than the top ⅓ of the roof to maintain a balanced ventilation system.

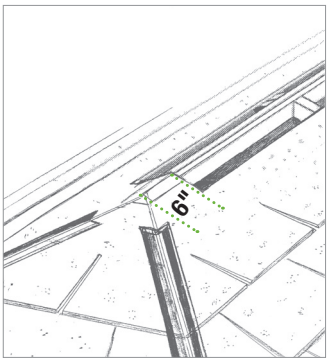

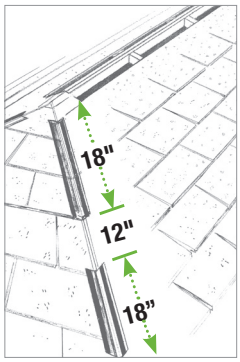

2. End Cap Installation

Pull apart a pre-cut section of the foam end cap found with the vent. Using a utility knife, make a cut in the StormStop® material ½” on each side, back from the end of the section. Using construction adhesive or sealant caulk, coat both sides of the StormStop material where it has been cut back at the end of the vent. Insert the foam end cap with the cut-back StormStop material between the foam end cap and the underside of the vent to assure a weather-tight seal. Because of the popularity of dimensional roofing material such as 40/50 year and lifetime laminated shingles,

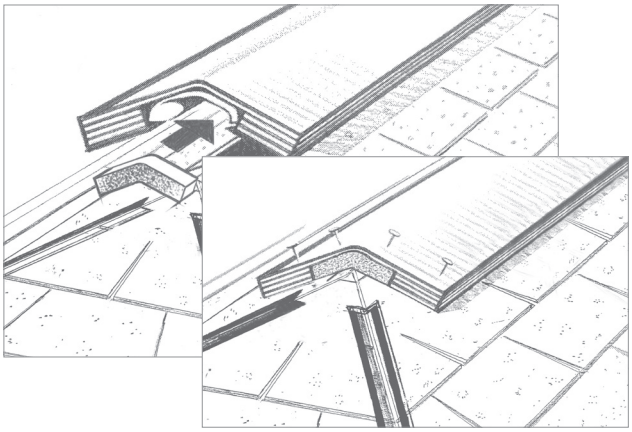

we require that a bead of sealant be applied to the roof shingles before installing the vent on the ridge. This sealant should fill any voids between the bottom of the vent and the surface of the shingle. Use either butyl sealant conforming to ASTM C1085, latex sealant conforming to ASTM C834, silicon sealant complying with ASTM C 920 or asphalt roofing cement complying with ASTM D4586.

3. Vent Placement on Ridge

Attach vent to the roof deck by driving a nail in each of the two corners on both ends of the vent. Also, drive two nails through the vent and foam end cap to hold foam in place on the ends of the ridge only. Nails should penetrate the wood roof deck at least ¾”. It is not recommended to nail vent to ridge prior to cap shingle installation. Because of the popularity of dimensional roofing material such as the newer 40/50 year and lifetime laminated shingles we require that a bead of sealant be applied to the roof shingles, before installing the vent on the ridge. See step 2 for recommended sealants.

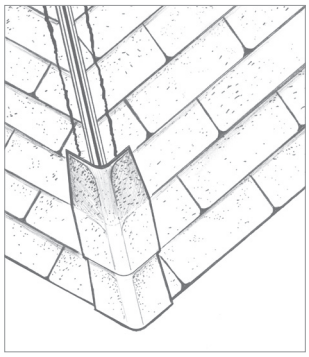

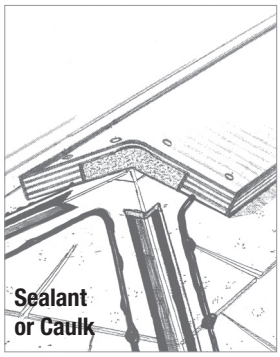

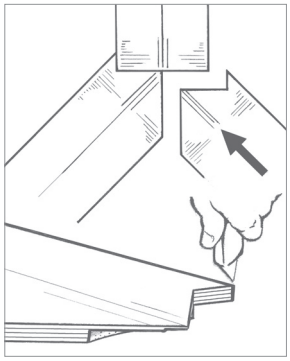

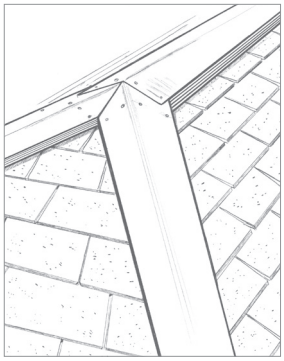

(Vent Placement On Ridge Continued) Roll out or place vent along the entire length of slot also covering the 6" minimum uncut ridge on both ends. When using R-Series (Rigid Roll) products, secure at the lead edge after inserting the end cap. Shape vent in V Shape. Pull the vent tight and secure at about 10 feet. Pull the rest of the vent tight and secure, inserting the end cap. Multiple lengths of vent can be joined by butting the sections tightly together. End cap should be inserted at the beginning and end of each section.

4. Vent Placement on Hip

Install a minimum of 2 cap shingles at the bottom of the hip. If the vent is not being run the entire length of the hip, the vent should overlap a minimum of 2 cap shingles at the end of the vent. Before installing the vent on the hip, lay a bead of sealant on each side of the pre-cut slots. This will create a seal on the step created by overlapping pattern of the shingles. The bead of sealant should be applied approximately 1" from the edge of the pre-cut slot.

Note: For "Class A" Installation Only
For "Class A" Quarrix vent installation, follow steps 1, 2, 3 as stated above. Once the vent has been installed, use a utility knife with a hook blade and remove the corrugated plastic center section of the vent. Do this for the hip and ridge. This modified installation meets the requirements for UL790 "Class A"; standard installation meets the requirements for UL790 "Class C." Follow remaining steps 4, 5, 6 as stated.

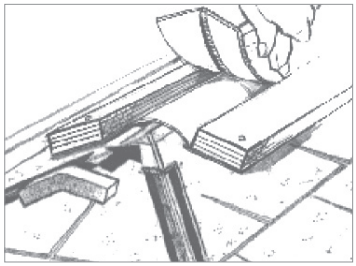

5. Hip and Ridge Vent Transition

Using a utility knife, trim the end of the vent from the hip to the ridge. This creates the most attractive ridge and hip line. Insert the foam end cap under the ridge vent where it is at full width. Fasten vent for hip at point where it meets ridge. Roll out or place the vent all of the way down the hip, covering 2 pre-laid cap shingles at the bottom of the hip. Go back over hip vents and fasten at 4" intervals. If the vent is not being run the entire length of the hip, use the cap shingles to create a transition. Use sealant to fill any void left between the shingles and the remaining top layer of the vent. Be sure to apply roofing sealant to any spaces left by cap shingle used for transition. If 2 or more sections of ridge vent are being joined together, an end cap MUST be installed into each end of the joining sections. Repeat on all hips.

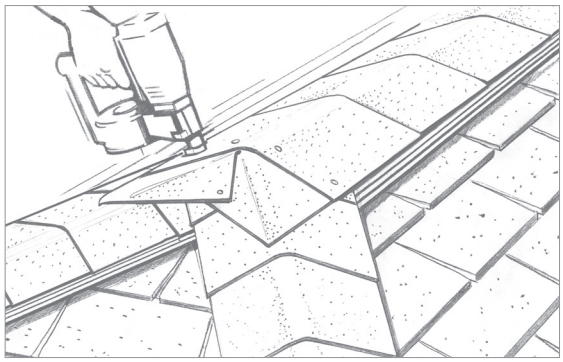

6. Cap Shingle Installation

Apply the cap shingles to the hip and then to the ridge. Nail hip and ridge caps with roofing nails in a common overlapping pattern. Nails should penetrate the wood roof deck at least ¾". For fastest installation, a coil nail gun can be used as long as the minimum ¾" penetration into the deck is maintained. It is important when installing this vent that you maintain the pitch of the roof. The vent has been installed properly if the bottom of the vent is flat on the roof and the peak is slightly rounded.

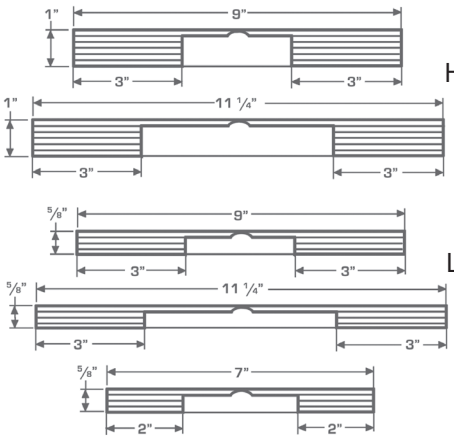

Quarrix Ridge Vents
High Profile - End Views

Quarrix Ridge Vents
Low Profile - End Views

Stone-Coated Steel Roofs

1. Ridge Ventilation Slot Preparation

Cut the slot prior to installing the last course of shingle panels along the ridge in a re-roof or new construction application (protective eye goggles should be worn during this process). For ⅝" profile 7" wide vents, cut a 2" slot (1" on each side of ridge) along the ridge. A minimum of 6" must be left uncut on each end of the ridge. Once the slot is cut then measure and cut shingle panels to fit along the ridge; panels should not obstruct the slot. Once the panels are installed, the ridge is ready for vent installation.

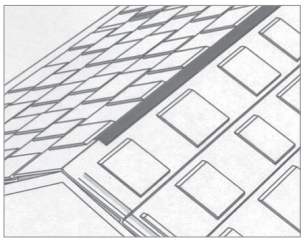

Retrofit with Stone-Coated Steel

If stone-coated steel is already installed, the slot can be cut from the pre-paneled roof using a circular saw with a combination blade (reversed) or a Tenryu Steel Pro blade (protective eye goggles should be worn during this process). For ⅝" profile 7" wide vents, cut a 2" slot (1" on each side of ridge) along the ridge. A minimum of 6" must be left uncut on each end of the ridge.

2. End Cap Installation

Pull apart a precut section of the foam end cap found with the vent, usually found in the first 3 feet of the roll. Use a utility knife to make a cut in the StormStop material 1⁄2" on each side, back from the end of the section (See insets). Using construction adhesive or sealant caulk, coat both sides of the StormStop material where it has been cut back at the end of the vent. Insert the foam end cap with the cut-back StormStop material between the foam end cap and the underside of the vent to assure a weather-tight seal.

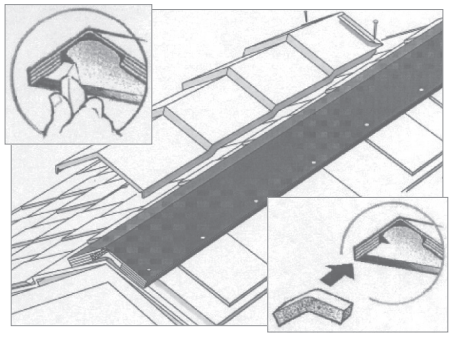

3. Vent Placement on Ridge

Before installing the vent on the ridge a bead of sealant is required between the stone-coated steel and the underside of the ridge vent. This sealant should fill any voids between the bottom of the vent and the surface of the panel. Caulking and sealants shall be suitable for exterior use and be resistant to weathering; use either butyl or polyurethane sealants. The caulking and the sealants shall be compatible with and adhere to the materials to which they are applied. Check sealant manufacturer's instructions and stone coated steel's installation guide for compatibility. Roll out or place ridge vent along the entire length of slot also covering the 6" minimum uncut ridge on both ends. When using R-Series (Rigid Roll) products, secure at the lead edge, inserting the end cap. Pull the vent tight and secure at about 10 feet. Pull the rest of the vent tight and secure, inserting the end cap. Multiple lengths of vent can be joined by butting the sections tightly together. An end cap should be inserted at the end of each section.

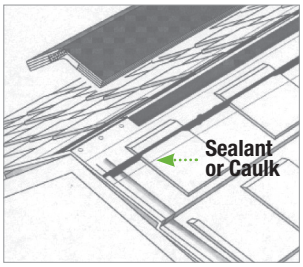

Attach vent to the roof deck by driving a nail or a #8 screw in each of the two corners on both ends of the vent. Also, drive two nails or #8 screws through the vent and foam end cap to hold foam in place on the ends of the ridge only. Fasteners should penetrate the wood roof deck at least ¾". It is recommended to fasten the vent to ridge prior to stone-coated steel hip/ridge cap installation. Vent should be secured every 5".

4. Cap Shingle Installation

It is important when installing this vent that you maintain the pitch of the roof. The vent has been installed properly if the bottom of the vent is flat on the roof and the peak is slightly rounded. Install hip/ridge caps per manufacturer's installation guide. Each hip/ridge piece should clip together by inserting the return (at the nose of each piece) into the back clip, which is located at the top of the hip/ridge cap section. Fasten cap to vent through the back clip using #8 screws. Fasteners should penetrate through the wood roof deck at least ¾".

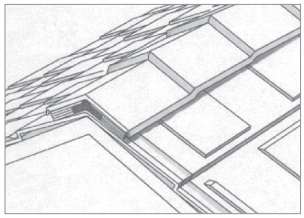

Flat Tile Roofs

1. Ridge Ventilation Slot Preparation

The slot must be cut on a new roof before field tile installation. The amount of ventilation is controlled by the length of slot cut along the roof ridge. Remember, for the most attractive roofline, it is recommended that Quarrix ridge vents be installed along the entire ridge of the roof. For ⅝" profile vents, a 3½" slot should be cut (1¾" on each side of ridge). For 1" profile vents a 4" slot should be cut (2" on each side of the ridge). A minimum of 6" must be left uncut on each end of the ridge. Once the slot is cut and the battens are installed, it is time to install the field and trim tiles per the tile manufacturer's installation instructions. After field tile installation, the ridge now is ready for vent installation.

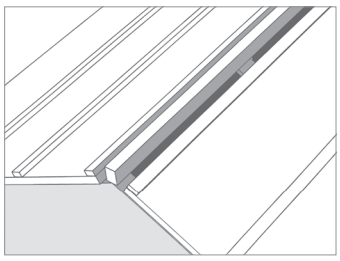

2. End Cap Installation

Pull apart a precut section of the foam end cap found with the vent. Using a utility knife, make a cut in the StormStop material ½" on each side of the vent, back from the end of the section. Using construction adhesive or sealant caulk, coat both sides of the StormStop material where it has been cut back at the end of the vent. Insert the foam end cap with the cut-back StormStop material between the foam end cap and the underside of the vent to assure a weather-tight seal.

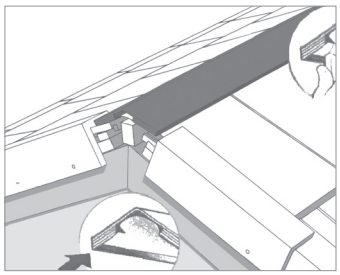

3. Vent Placement on Ridge

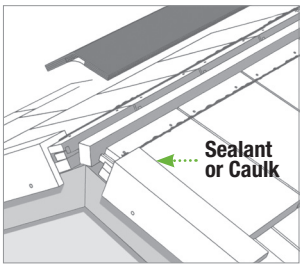

Before installing the vent on the ridge, a bead of sealant is required between the roof tile and the under side of the ridge vent. This sealant should fill any voids between the bottom of the vent and the surface of the tile. Caulking and sealants shall be suitable for exterior use and be resistant to weathering. The caulking and the sealants shall be compatible with and adhere to the materials to which they are applied. Check sealant manufacturer's instructions for compatibility. Roll out or place vent along the entire length of slot also covering the 6" minimum uncut ridge on both ends. Multiple lengths of vent can be joined by butting the sections tightly together. An end cap should be inserted at the end of each section.

4. Cap Tile Installation

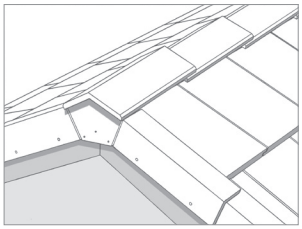

It is important when installing this vent that you maintain the pitch of the roof. The vent has been installed properly if the bottom of the vent is flat on the roof and the peak is slightly rounded. Install cap tiles per tile manufacturer's installation instructions. Ridge vent installed in this manner meet the requirement for weather blocking according to Concrete and Clay Roof Tile Design Criteria Installation Manual for Moderate Climate Regions, ICBO ER 6034P.

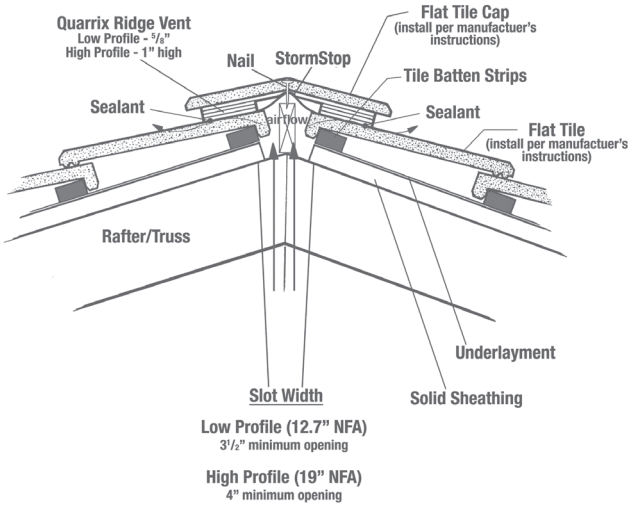

Notes: Install with continuous soffit ventilation at the eave.
Low Profile - A minimum of 6.5" NFA per lineal foot at each eave
High Profile - A minimum of 9.5" NFA per lineal foot at each eave

Cedar Shake & Shingle Roofs

1. Ridge Ventilation Slot Preparation

The slot may be precut on a new roof before or after shake installation or in a retrofit, the slot can be cut from the roof using a circular saw with a carbide tip blade (protective eye goggles should be worn during this process). For ⅝" profile vents, cut a 2" slot (1" on each side of ridge) along the ridge(s). For a roof with a center beam, a 3½" slot should be cut (1¾" on each side of ridge). For 1" profile vents, cut a 2½" slot (1¼" on each side ridge). For center beam applications a 4" slot should be cut (2" on each side of ridge). A minimum of 6" must be left uncut on each end of the ridge.

2. End Cap Installation

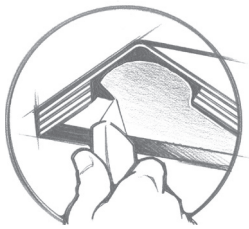

Pull apart a precut section of the foam end cap found with the vent. For products with StormStop, using a utility knife, make a cut in the StormStop material ½" on each side, back from the end of the section. Using construction adhesive or sealant caulk, coat both sides of the StormStop material where it has been cut back at the end of the vent. Insert the foam end cap with the cut back StormStop material between the foam end cap and the underside of the vent to assure a weather-tight seal. Attach vent to the roof deck by driving a nail in each of the two corners on both ends of the vent. Also, drive two nails through the vent and foam end cap to hold foam in place on the ends of the ridge only. Nails should penetrate the wood roof deck at least ¾". It is not recommended to nail vent to ridge prior to cap shake installation.

3. Vent Placement on Ridge

Before installing the vent on the ridge, apply a bead of sealant on each side of the ridge slot. This sealant should fill any voids between the bottom of the vent and the surface of the cedar shakes. Use either butyl sealant conforming to ASTM C1085; latex sealant conforming to ASTM C834; silicone sealant complying with ASTM C920 or asphalt roofing cement complying with ASTM D4586. Roll out or place vent along the entire length of slot also covering the 6" minimum uncut ridge on both ends. When using R-Series (Rigid Roll) products, secure at the lead edge with end cap. Nail should penetrate roof deck a minimum of ¾". Pull the vent tight and secure at about 10 feet. Pull the rest of the vent tight and secure, inserting the end cap. Multiple lengths of vent can be joined by butting the sections tightly together. An end cap should be inserted at the end of each section.

Note: For "Class A" Installation Only
For "Class A" Quarrix vent installation, follow steps 1, 2, 3 as stated above. Once the vent has been installed, use a utility knife with a hook blade and remove the corrugated plastic center section of the vent. Do this for the hip and ridge. This modified installation meets the requirements for UL790 "Class A", standard installation meets the requirements for UL790 "Class C". Follow remaining steps 4 as stated.

4. Cap Shake Installation

Secure shake caps and vent at the same time using a nail that should penetrate the wood roof deck at least ¾". It is important when installing this vent that you maintain the pitch of the roof.

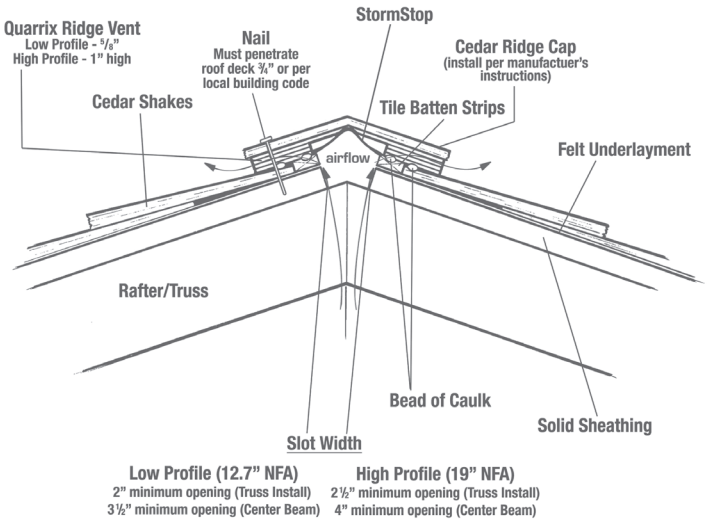

Metal Roofs

1. Ridge Ventilation Slot Preparation

Cut the slot along the ridge prior to installing metal panels in a re-roof or new construction application (protective eye goggles should be worn during this process). For ⅝" profile 9" wide vents, cut a 2" slot (1" on each side of ridge) along the ridge. A minimum of 6" must be left uncut on each end of the ridge. Once the slot is cut then measure and cut metal panels to fit along the ridge; panels should not obstruct the slot. Once the panels are installed, the ridge is ready for vent installation. Place foam closure or metal closure on each side of ridge. Install Quarrix Ridge Vent.

Retrofit metal roofing is already installed; the slot can be cut using a circular saw with a combination blade (reversed) or a Tenryu Steel Pro blade (protective eye goggles should be worn during this process). For 5/8" profile 9" wide vents, cut a 2" slot (1" on each side of ridge) along the ridge. A minimum of 6" must be left uncut on each end of the ridge. Place foam closure or metal closure on each side of ridge. Install Quarrix Ridge Vent.

2. End Cap Installation

Pull apart a pre-cut section of the foam end cap found with the vent, found 3 feet into the roll. Use a utility knife to make a cut in the StormStop material ½" on each side, back from the end of the section. Using construction adhesive or sealant caulk, coat both sides of the StormStop material where it has been cut back at the end of the vent. Insert the foam end cap with the cut-back Storm Stop material between the foam end cap and the underside of the vent to assure a weather-tight seal.

3. Vent Placement on Ridge

Before installing the ridge vent, a bead of sealant is required between the metal or foam closure and the underside of the vent, filling any voids. Caulking and sealants shall be suitable for exterior use and be resistant to weathering; use either butyl or polyurethane sealants. The caulking and the sealants shall be compatible with and adhere to the materials to which they are applied. Check sealant manufacturer's instructions and metal manufacturer's installation guide for compatibility. Roll out or place ridge vent along the entire length of slot also covering the 6" minimum uncut ridge on both ends.

When using R-Series (Rigid Roll) products, secure at the lead edge, inserting the end cap. Pull the vent tight and secure at 10 feet. Pull the rest of the vent tight and secure, inserting the end cap. Multiple lengths of vent can be joined by butting the sections tightly together. An end cap should be inserted at the end of each section. Attach vent to the roof deck metal fastener in each of the two corners on both ends of the vent. Also, drive two fasteners through the vent and foam end cap to hold foam in place on the ends of the ridge only. Fasteners should penetrate the wood roof deck at least ¾". It is recommended to fasten the vent to ridge prior to hip/ ridge cap installation.

4. Cap Installation

It is important when installing this vent that you maintain the pitch of the roof. The vent has been installed properly if the bottom of the vent is flat on the roof and the peak is slightly rounded. Install metal ridge cap over Quarrix Ridge Vent according to metal manufacturer's installation instructions.

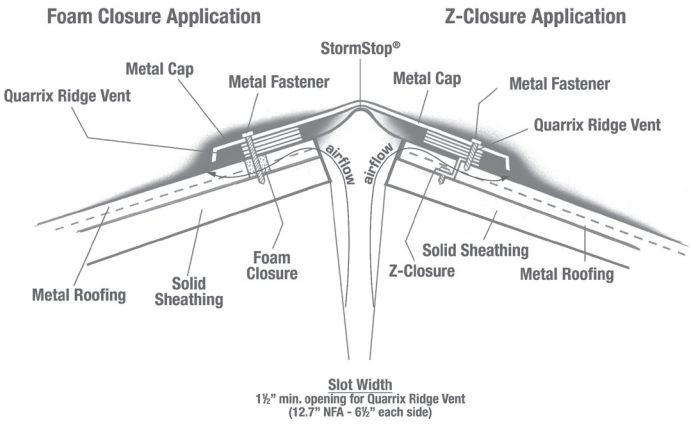

Notes: Install with continuous soffit ventilation at the eave. A minimum of 6.5" NFA per lineal foot at each eave.