Quarrix®

COMPOSITE ROOFING SOLUTIONS

TILE & COMPONENT SYSTEM

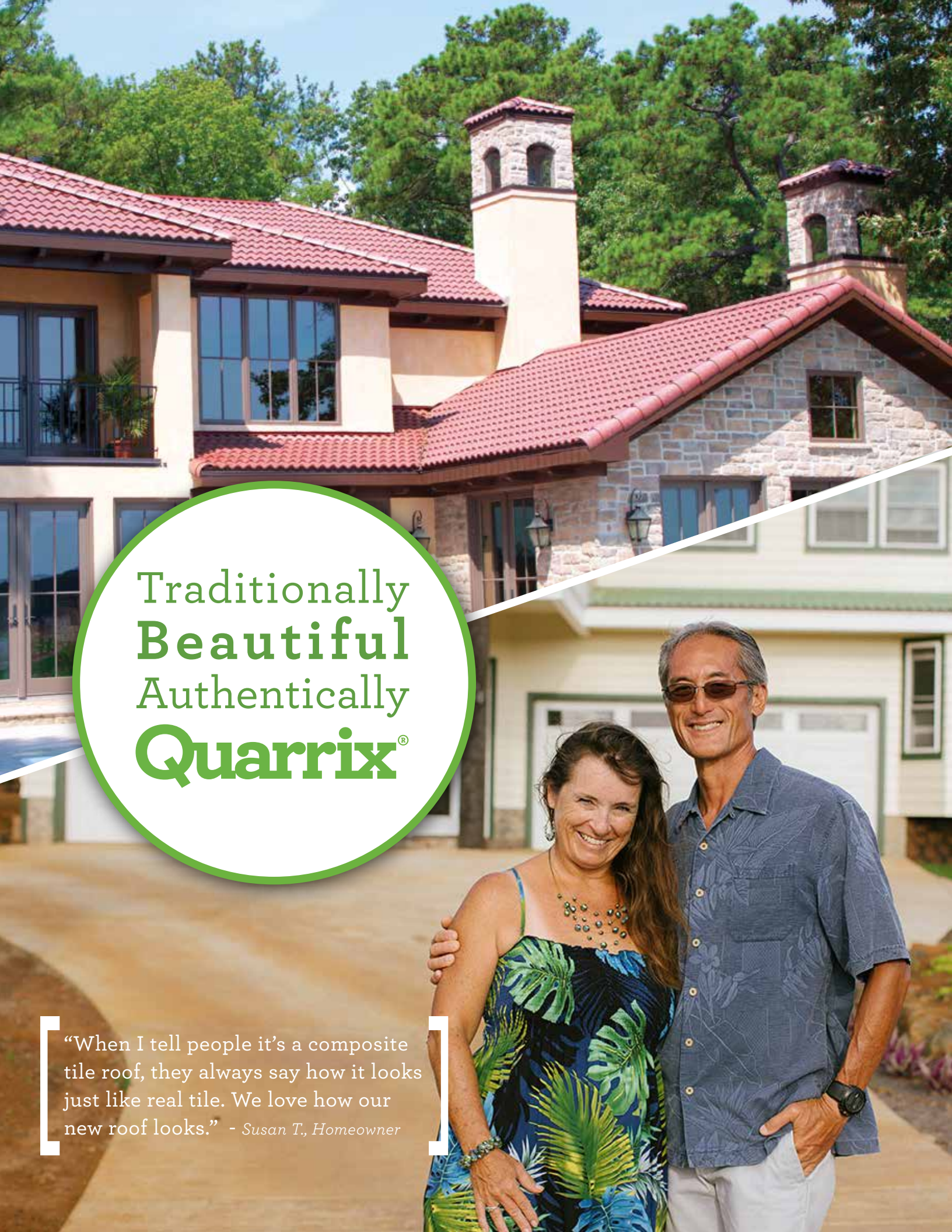
Traditionally
Beautiful
Authentically
Quarrix®
"When I tell people it's a composite tile roof, they always say how it looks just like real tile. We love how our new roof looks." - Susan T., Homeowner

PEACE OF MIND FOR THE LIFE OF THE ROOF

We know choosing a tile roof is a big decision. At Quarrix, we developed our composite tile to provide beauty and long-term superior performance. Manufactured in the USA and backed by a 50-year warranty, our composite tile offers you the best of both worlds, beauty and peace of mind for the life of the roof.

Contents

Colors 2

Specs 3

Gallery 4

System Advantage . . 6

Tile Components 7

FAQ's 8

Warranty 9

2001DR Desert Red

2001GR Goldenrod

2001CE Canyon Earth

2001SG Sage

2001SB Saddle Brown

2001BK Black

THE LOOK OF A CLASSIC DOUBLE BARREL TILE

THE PEACE OF MIND OF COMPOSITE

Lightweight Design Reduces Installation Costs

With 67% less weight than traditional clay and concrete tile, our composite tile doesn't require extra roof reinforcement or time waiting for the roof to acclimate to the weight load. Composite tile can potentially save 1-3 weeks in job installation time.

Lasts for the Life of the Roof

Backed by a 50-year warranty, the durability of composite tile is unmatched when compared to clay tile. Made of a durable HDPE material and certified with a Class 4 impact rating, Quarrix tile will not chip or break when hit, dropped or walked on. No more golf ball or hail damage. Tile remains durable throughout the shipping and installation process.

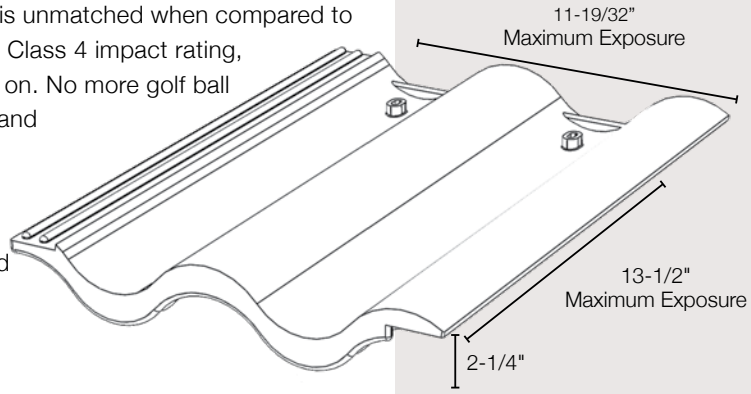

Cold Weather Approved

Not susceptible to freeze and thaw issues, such as cracks and loose tiles. Can be installed in all cold weather climates.

Predrilled Holes for Easy Installation

Each tile is predrilled making installation faster and easier. The product can be cut, drilled and fastened with standard tile roofing tools. Our tile fasteners are superior to regular fasteners.
See page 7 for details

Complete Fastener and Accessory System

A system built to protect the beauty and durability of tile roofs. Full line of accessories—Tile Fasteners, Tile Battens, Tile Flashing and Tile Ridge Vent – provide protection against aging and fail points caused by water drainage, poor air-circulation, mortar joints and challenging roof angles. *See page 6 for the Quarrix System Advantage*

Hip/Ridge/Rake Tile

OVERALL DIMENSIONS	MAXIMUM EXPOSURE
8-1/2" x 16-1/2" x 3-7/8"	13-1/2"

Desert Red 2010DR | Canyon Earth 2010CE | Saddle Brown 2010SB | Goldenrod 2010GR | Sage 2010SG | Black 2010BK

Hip Starter Tile

OVERALL DIMENSIONS	MAXIMUM EXPOSURE
8-1/8" x 17" x 3-7/8"	13-1/2"

Desert Red 2011DR | Canyon Earth 2011CE | Saddle Brown 2011SB | Goldenrod 2011GR | Sage 2011SG | Black 2011BK

Double Roman

OVERALL DIMENSIONS
13" x 16-1/2"

MAXIMUM EXPOSURE
13-1/2" Height
11-19/32" Width

SHIPPING INFORMATION
3.38lbs. per piece
92 pieces per square
3 squares per pallet
(1 square = 100 sq ft)

POUNDS PER SQUARE
304 lbs.

IMPACT RATING
Class 4 (FM 4473)

BURNING BRAND
Class C

MATERIAL
Polyethylene Polymer
(see page 8)

WARRANTY
50 Year Limited

Actual colors may vary from printed representation.

CUSTOM BLEND

CUSTOM BLEND Indianapolis, Indiana

Tile Roof Visualizer Design Tool

See the beauty of Quarrix composite tile on your home with our easy-to-use roof visualizer design tool. Choose from our gallery of home photos or upload your own house photo to see the look and feel of Quarrix tile on your home.

Visit Quarrix.com/Roof-Design-Tool

DESERT RED Minneapolis, Minnesota

DESERT RED Deal, New Jersey

DESERT RED Nashville, Tennessee

DESERT RED Norman, Oklahoma

SYSTEM ADVANTAGE

At Quarrix, we believe beautiful homes begin with beautiful roofs. And Quarrix tile roofs stay beautiful longer when they are properly installed using our complete system of tile components. Our system begins before the first tile is laid. It provides the foundational support tile roofs need and is engineered to protect against aging and fail points caused by water drainage, poor air-circulation, mortar joints and challenging roof angles. Quarrix tile components provide long-term superior performance for your peace of mind.

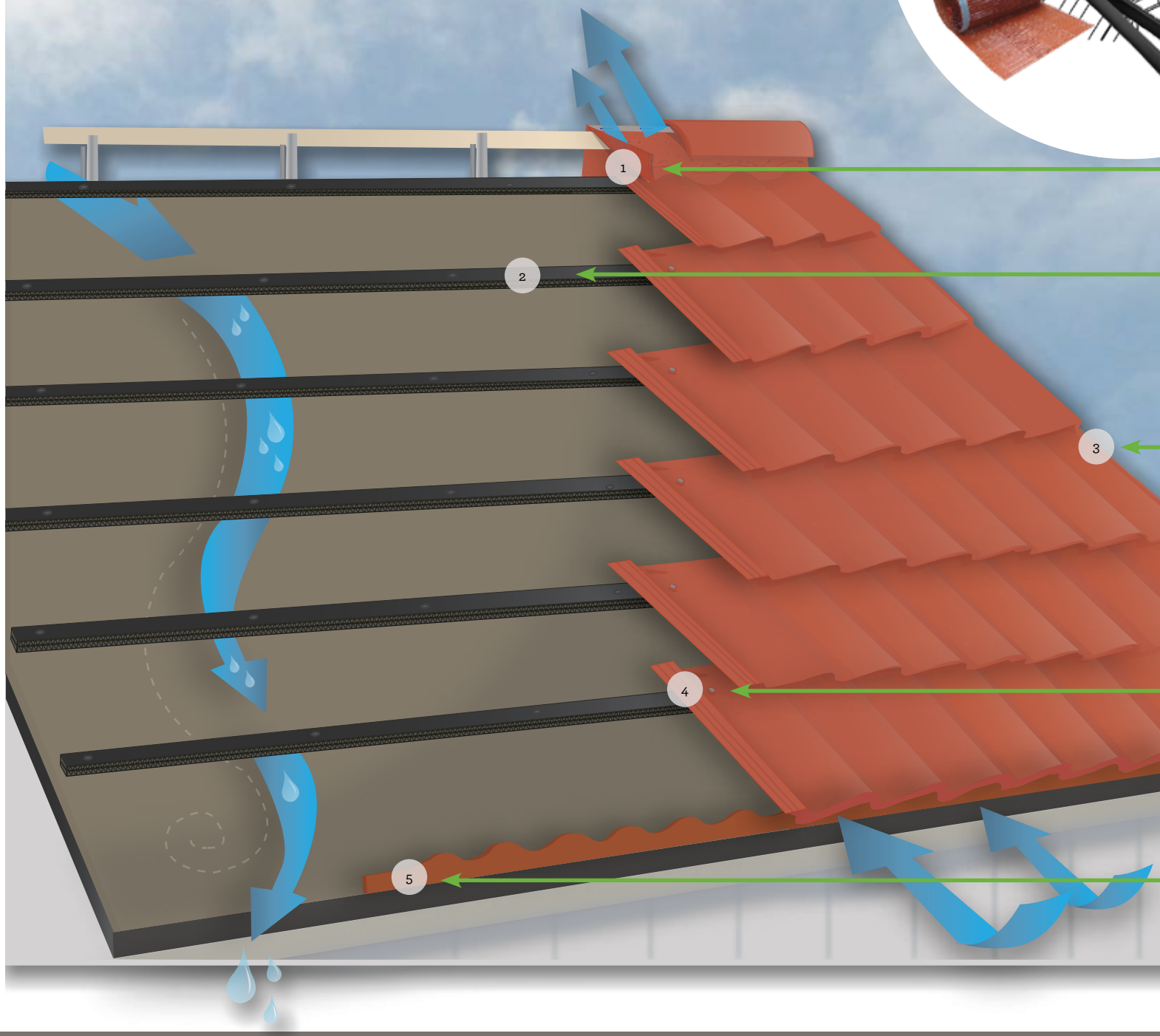

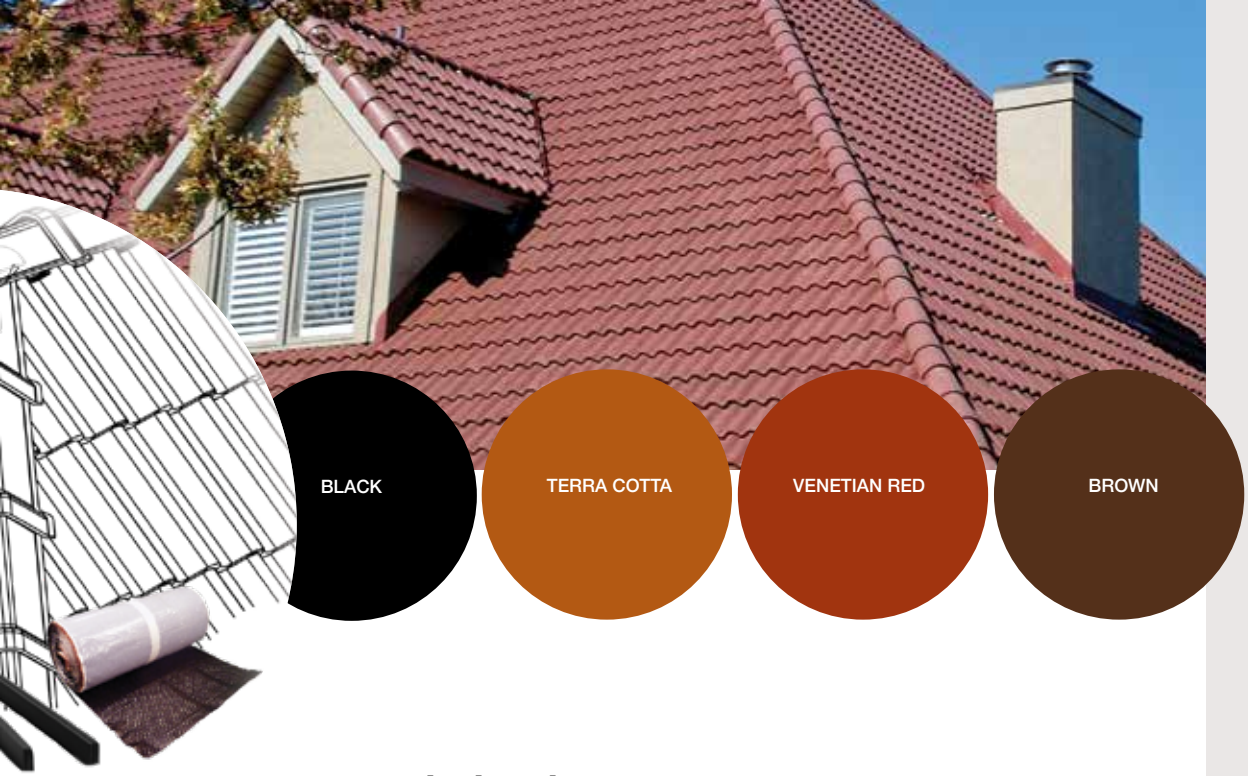

1

Universal Tile Ridge Vent

Quarrix® all-in-one Universal Tile Ridge Vent and weather blocking creates ventilation and air flow under tile and helps achieve a cool roof system.

2

Tile Battens

A central and vital component to building a long-lasting foundation. This single component, Quarrix® Tile Batten, creates a superior foundation due to its durability and resistance to moisture damage caused by rain, snow and ice build-up.

3

Universal Tile Flashing

Quarrix® all-in-one Universal Tile Flashing works as both flashing and weather blocking. Coined the term 'tile duct-tape' for its unique butyl backing and flexibility to be applied anywhere on the roof where you need to protect against water intrusion – head wall, chimney, hip, ridge, valley, skylights and any place mortar would normally be applied. A sure defense to Mother Nature's worse elements.

4

Tile Fasteners

Engineered to be your "go-to" outdoor fastener, the large .40" pan head securely anchors tile, plates, clips and brackets for a variety of outdoor applications. High corrosion resistance with PPG Powercron® XP epoxy coated hardened steel tested to SAE J78 standard. The high-low thread configuration and spade-point quickly and easily penetrates wood, steel and composite materials while guarding against overtightening.

5

Metal Closures

Quarrix® upper and lower metal closures protect eaves from debris and infestation. Available in five tile matching colors, creating an aesthetically pleasing finished look.

Universal Tile Ridge Vent

DIMENSIONS

Black 15" x 25'
Terra Cotta 15-3/4" x 16'
Venetian Red 15-3/4" x 16'
Brown 15-3/4" x 16'

ADHESIVE

Apply in 40ºF to 210ºF

MATERIAL

Durable UV-Resistant Aluminum

Universal Tile Flashing

DIMENSIONS

11-3/4"x16'

COLORS

Black, Terra Cotta,
Venetian Red, Brown

ADHESIVE

Apply in 40ºF to 150ºF

MATERIAL

Durable UV-Resistant Aluminum

Tile Battens

DIMENSIONS

8' x 1-1/2 x 3/4"

NFA

5.6 sq in/lin ft

MATERIAL

HDPE Plastic

WARRANTY

50 Year Limited

PRODUCT

60917

US PATENT

6357193

Tile Fasteners

OVERALL LENGTH

2-3/4"

THREAD LENGTH

1-1/2"

MATERIAL

Steel

FAQ's

What material is Quarrix composite tile made of?

High-density polyethylene (HDPE) resin as the base blended with fire retardant (made with recycled content) and UV stabilizers.

How much lighter is composite tile than traditional tile?

Quarrix composite tiles are one-third the weight (67% less weight) than natural concrete and clay tile and are equal to the typical weight of asphalt shingles. It is the tile's light-weight design that provides an incredible advantage during the installation process. Less structural materials can be used because special roof reinforcement is not required due to the lighter weight of composite tile.

Will the Quarrix composite tile mold or degrade?

The tile may experience algae or moss growth, but will not deteriorate and can be cleaned.

Is Quarrix's roof tile suitable for all climates?

Our composite tile has been tested for and installed in every climate zone in North America. The tile's ability to withstand the hottest summers and harshest winters make it a great product in any climate.

How do I request a sample?

We understand that material quality, color, style, and weight are important factors to consider during the design process. We offer color chips, display boards, and product samples to help visualize your new roof. Simply fill out our Sample Request Form online at Quarrix.com.

BLACK Newburgh, New York

TILE & TILE COMPONENTS
WARRANTY

Submissions can be made at Quarrix.com/warranty.

QUARRIX BUILDING PRODUCTS ("QUARRIX"), WARRANTS TO THE OWNER OF THE BUILDING AT THE TIME Composite Tile ("Quarrix Products") WERE ORIGINALLY INSTALLED ("Owner"), ONLY THAT the Quarrix Products will be free from manufacturing defects so as to not rot, split, splinter or suffer structural damage from normal weather conditions and termite or fungal decay when subject to normal use for a period of fifty (50) years from the date of original purchase or will not blow off or otherwise become damaged by winds less than eighty (80) miles per hour for a period of ten (10) years from the date of original purchase.

QUARRIX'S LIABILITY UNDER THIS WARRANTY IS LIMITED SOLELY TO REPLACEMENT OF DEFECTIVE QUARRIX PRODUCTS. OR, AT QUARRIX'S OPTION, REFUND OF ORIGINAL PURCHASE PRICE OR REASONABLE REPLACEMENT COST (as defined hereinafter). Owner's sole and exclusive remedy for any claim whatsoever, whether in contract, warranty, tort, strict liability, or otherwise arising out of the use, storage or possession of Quarrix Products, including without limitation any claim that Quarrix Products failed to perform as warranted, shall be replacement with substitute Quarrix Products or refund of the original purchase price. To obtain replacement or refund, the Owner must have returned a copy of this certificate within thirty (30) days of installation and must submit a claim within thirty (30) days of the discovered defect together with this warranty certificate, the original purchase invoice indicating the date of purchase, pictures, a sample of the defective Quarrix Products, and a detailed description of the defect to Quarrix for settlement at Quarrix Building Products, 705 Pennsylvania Ave. S, Minneapolis, MN 55426.

THIS WARRANTY SHALL NOT APPLY TO QUARRIX PRODUCTS THAT HAVE NOT BEEN INSTALLED IN ACCORDANCE WITH MANUFACTURER'S GUIDELINES AND ALL APPLICABLE BUILDING OR SAFETY CODES OR HAVE NOT BEEN PAID IN FULL. This warranty does not provide protection against any failure, defect or damage caused by situations and events beyond Quarrix's control, including but not limited to: (i) natural disasters, hail over 1.0" in diameter, fire, smoke, chemicals, earthquakes, lightning or static electricity, (ii) falling, thrown or blown objects, (iii) the neglect, abuse, misuse (including faulty installation, repair or maintenance), improper transportation, handling or storage of the Quarrix Products or other failure to comply with the instructions set forth in the documentation and/or manual accompanying the Quarrix Products, (iv) a modification of the Quarrix Products not provided by Quarrix, (v) a malfunction of any product not provided by Quarrix with which the Quarrix Products are used or combined, (vi) use, modification or other treatment of the Quarrix Products in a manner for which it was not designed or intended, (vii) defects or damage due to inferior building practices, ventilation, drainage issues or roof slopes inconsistent with snow and ice control, (viii) replacement under or subjection to abnormal use conditions, (ix) normal wear and tear including the natural effects of progressive aging on the color and surface of the tile, (x) discoloration and variations in color or uniformity caused by weathering and/or UV exposure, staining due to shade or sap, ash or proximity to metals that might cause discoloration; (xi) foot traffic, (xii) vandalism or other malicious actions, or (xiii) Quarrix Products blown off by winds in excess of 80 mph. This warranty does not cover product defects on installed roofs where such defects were apparent at or prior to installation.

After ten (10) years from the original purchase date, however, if Quarrix chooses to pay Reasonable Replacement Cost of the affected products, the amount Quarrix may pay will be reduced by the amount of usage the Owner has received of affected products. Thus, Quarrix will pay a percentage of the Original Purchase Price of the affected products. The percentage will be determined by dividing the number of months remaining in the warranty by 600 (the number of months in the original warranty period). This percentage will be multiplied times the ORIGINAL PURCHASE PRICE for the affected product. NOTE: Reasonable Replacement Costs covered by this Limited Warranty do not include costs to tear-off, dump fees, flashing, metal work, underlayment related work or related materials, or any labor associated with any replacement.

QUARRIX'S WARRANTY SHALL APPLY ONLY TO THE QUARRIX PRODUCTS. IN NO EVENT SHALL QUARRIX BE LIABLE FOR TRANSPORTATION, LABOR OR OTHER EXPENSES INCURRED BY THE OWNER, OR SPECIAL, INCIDENTAL, EXEMPLARY OR CONSEQUENTIAL DAMAGES OF ANY KIND WHATSOEVER, WHETHER BASED UPON WARRANTY, CONTRACT, TORT, STRICT LIABILITY OR OTHERWISE. QUARRIX'S LIABILITY ARISING OUT OF THE MANUFACTURE, SALE OR SUPPLY OF THE QUARRIX PRODUCTS OR THEIR USE SHALL NOT EXCEED THE ACTUAL PURCHASE PRICE. THIS WARRANTY MAY BE TRANSFERRED ONE TIME TO NEW OWNER OF THE STRUCTURE WITHIN SEVEN (7) YEARS OF THE DATE OF ORIGINAL INSTALLATION. To do so, the original Owner must send a certified letter requesting the transfer, along with a photocopy of the original warranty or purchase contract, and provide the name, address and purchase date of the new Owner to Quarrix Building Products, 705 Pennsylvania Ave. S, Minneapolis, MN 55426, who will return a warranty to the new Owner.

OWNER IS SOLELY RESPONSIBLE FOR DETERMINING THE SUITABILITY OF USE OR APPLICATION OF ANY QUARRIX PRODUCT, OR WHETHER QUARRIX PRODUCTS MEET REQUIREMENTS OF APPLICABLE BUILDING CODES OR SAFETY CODES FOR SPECIFIC APPLICATIONS.

No person or entity is authorized by Quarrix to make, and Quarrix shall not be bound by, any statement or representation as to the performance of Quarrix Products other than what is contained in this warranty. This warranty shall not be amended or altered except in a written instrument signed by Quarrix and Owner.

THE FOREGOING WARRANTY IS EXCLUSIVE AND IN LIEU OF ANY OTHER WARRANTIES WITH RESPECT TO QUARRIX PRODUCTS, WHETHER ORAL OR WRITTEN, EXPRESS OR IMPLIED, INCLUDING WITHOUT LIMITATION, ANY IMPLIED WARRANTY OF MERCHANTABILITY, FITNESS FOR A PARTICULAR PURPOSE OR NON-INFRINGEMENT.

Laws from time to time in force in certain jurisdictions may imply warranties that cannot be excluded or can only be excluded to a limited extent. This warranty shall be read and constructed subject to any such statutory provisions. This warranty gives you specific legal rights. You may have other rights, which vary from state to state.

Building Innovation Since 1985

At Quarrix, we're revolutionizing the way people roof. Nearly 30 years ago, we paved our way in the world of building materials with innovations in attic ventilation with our line of ridge vent products. Since then, we've expanded our product line to include solutions for the entire roof. Innovation is the hallmark of Quarrix, from composite roofing tiles to soffit vents to pipe flashings (and nearly everything in between), our complete product lineup allows architects, contractors and homeowners to achieve a beautiful roof that is authentically Quarrix.

As part of the Liberty Diversified International (LDI) family of companies, the Quarrix brand is a leader in high-quality roofing solutions today. LDI is headquartered in Minneapolis, Minnesota with over 1,500 employees nationwide and is one of the largest privately held companies in the Midwest. As a third generation, family-owned business, LDI has been a manufacturing innovator for nearly 100 years. LDI's passion for innovation founded Quarrix Building Materials over 30 years ago. With LDI's support, we've made developments in breakthrough patented designs and advanced building materials and have quickly emerged as a leader in the specialty roofing products industry.

FIND A QUARRIX DEALER NEAR YOU

Quarrix Building Products can be purchased through authorized wholesale distributors.

A Quarrix representative can assist you in finding a dealer near you.

Interested in becoming an authorized dealer?

Contact us at 1-800-438-2920 or Quarrix.com

Quarrix is a registered trademark of Verscene. BKLT-DR23-10.10.18